Selecting Analog-to-Digital Converters For Data Acquisition:

An Overview of Test Methodologies

by
Tim J. Sobering

April 29, 1996

This presentation will address system level issues regarding ADC testing and performance

- Background information
- Roles of ADC's in data acquisition
- Overview of ADC test methods
- Multiplexing and the impact on ADC requirements
- Wrap-up

ADC's a Sampling Converters a Digitizers

Background

- BSEE '82, MSEE '84 from Kansas State University

  Specialization in Instrumentation and Analog Design

  Thesis - "The Design of Low-Power, High-Resolution, Analog-to-Digital Conversion Systems with Sampling Rates less than 1kHz"

- Employed since 1984 by Sandia National Laboratories

  Development and evaluation of sensors for security systems

  Design of electro-optic sensor systems for remote sensing

- Primary areas of expertise

  Low-noise analog signal conditioning

  Analog-to-digital conversion

  Electro-optic system design

  Concept development/project management

Sandia National Laboratories has served as a Prime Contractor to the DOE for over 40 years

- Sandia is a government-owned contractor-operated (GOCO) facility.
- Currently Lockheed Martin manages Sandia.
- Sandia's principal function is weapons research and development and maintenance of the Nation's nuclear stockpile (~60%).
- Sandia has broadened its mission to include such areas as:

Energy Research	Microelectronics and Photonics
Safeguards and Security	Robotics
Environmental Restoration	Supercomputing
Treaty Monitoring	

- Sandia currently employs approximately 7500 people in Albuquerque, NM, and 900 people in Livermore, CA.

ADC's are a key component in a data acquisition system

- ADC's are the interface between the experiment (real world) and the computer (data analysis)
- Improper ADC selection can introduce significant errors into the data
- Manufacturers test methods vary widely making converter selection difficult

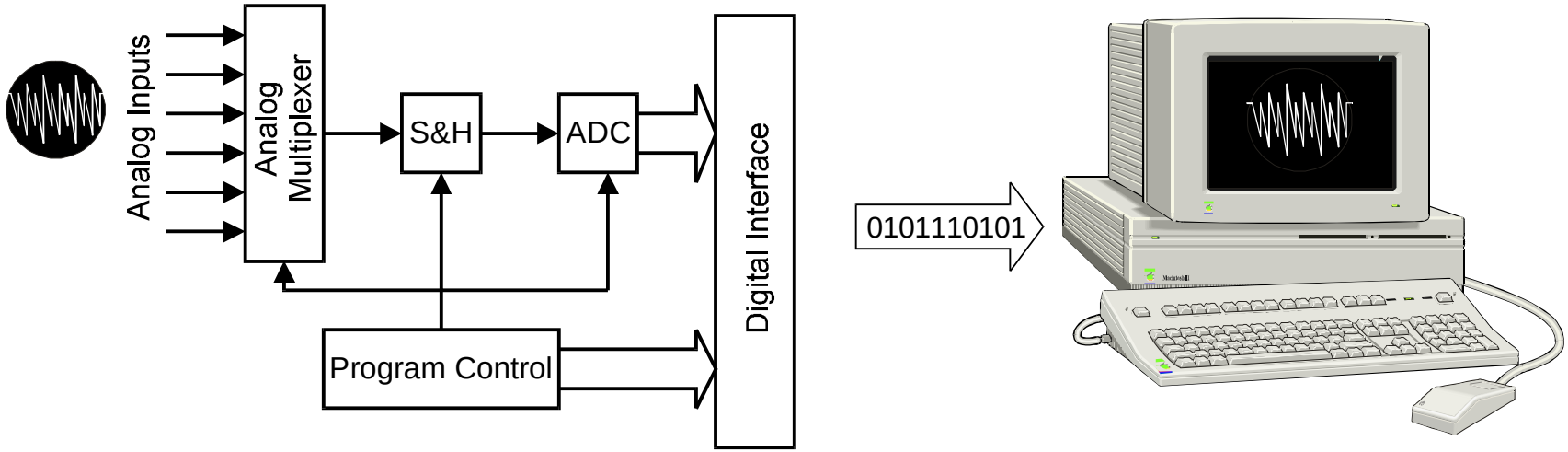

The goal is to preserve the information in the signal, which insures the quality of the data

ADC's are typically operated in one of three modes

- DC (low-frequency) Conversion

  Signal is "stable" between samples and during acquisition

  Examples: digital voltmeters, temperature probes

- Signal Reconstruction

  Conditions of the Sampling Theorem are met

  Example: CD audio, frequency analysis

- Time-multiplexed Operation

  Multiple signal sources are digitized using a single ADC

  Examples: data logging, CCD arrays

Two classes of tests are used for characterizing ADC's

- Static Testing

  Effectively a DC input signal

  Good for gross characterization of devices

  Not representative of the mode of operation of most ADC's

- Dynamic Testing

  Usually a sinusoidal input signal

  Multiple tests have been developed to measure different parameters

  Results directly applicable to devices operated in Signal Reconstruction Mode

  Tests do not address multiplexed operation

Dynamic testing reveals errors not detected in static tests

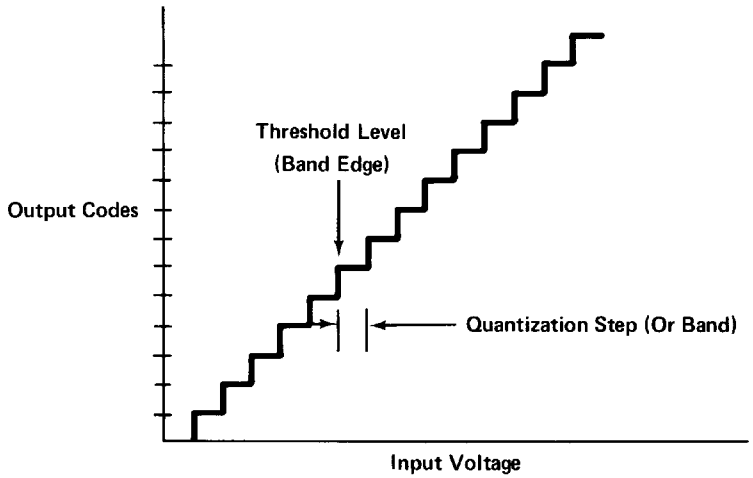

Static Testing

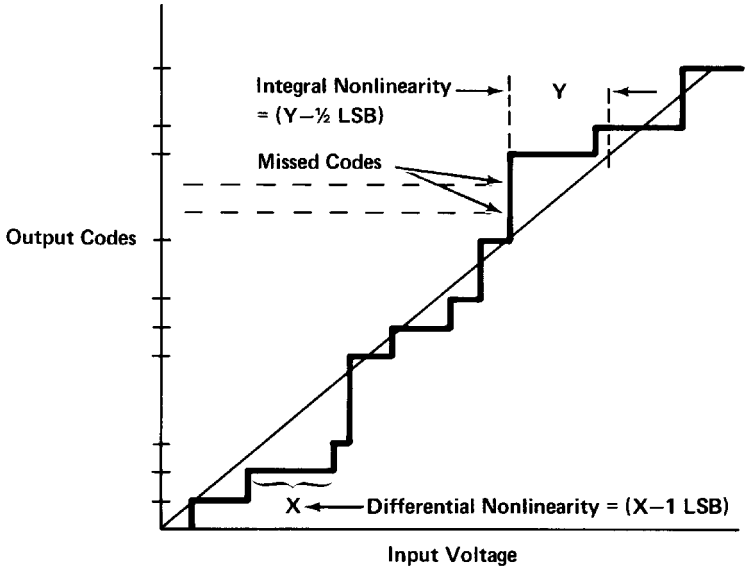

Dynamic Testing

The performance of an ADC is very dependent on the slew rate of the signal being digitized

Figures from Reference 1

The Sampling Theorem defines the conditions for signal reconstruction

- The Sampling Theorem (Shannon, 1948) establishes the minimum sampling rate for a band-limited signal so that it is uniquely determined by its sampled values

  $f_s=2B$ Where: f_s is the sampling rate and B is the signal bandwidth

- If the Sampling Theorem is observed, the data between the samples can be reconstructed

- Aliasing occurs if frequencies greater than $f_s/2$ are present. This is also know as the Nyquist frequency, f_n.

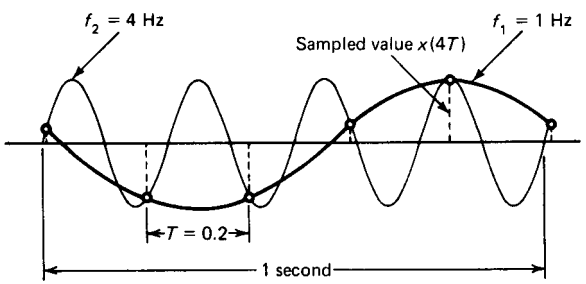

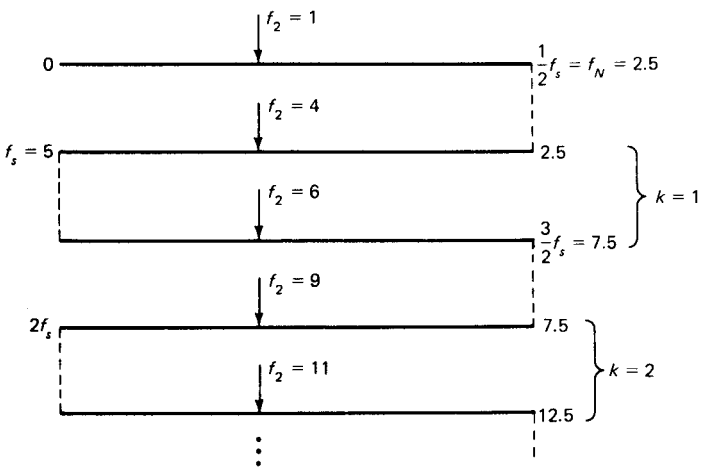

Figures from Reference 6

No single test method measures all ADC parameters

- Fast Fourier Transfer Test

  Integral nonlinearity (INL), signal-to-noise ratio (SNR)

- Histogram Test

  Differential nonlinearity (DNL), missing codes, gain and offset errors

- Sine Wave Curve Fit

  Total rms error and effective number of bits (ENOB)

- Other tests

  Beat Frequency Test - gross characterization

  Envelope Test - stringent test of settling time (Nyquist limited)

Fast Fourier Transform test

- Digitize a spectrally pure near full-scale sinusoid and compute the FFT
- Measures INL and SNR of device
- Advantages:

  Small number of samples required (typically 1024)

  Fast

- Disadvantages:

  Small number of ADC codes exercised in high resolution ADC's

  Differential nonlinearity, aperture uncertainty, and system noise are lumped together

  Spectrally pure test signal can be difficult to generate for fast ADC's

  Very sensitive to test signal noise

FFT test examples

- FFT plots for a 20 MHz, 8-bit ADC with input frequencies of 0.95 MHz and 9.85 MHz
- Note increase in harmonic distortion indicating significant INL at higher slew rates

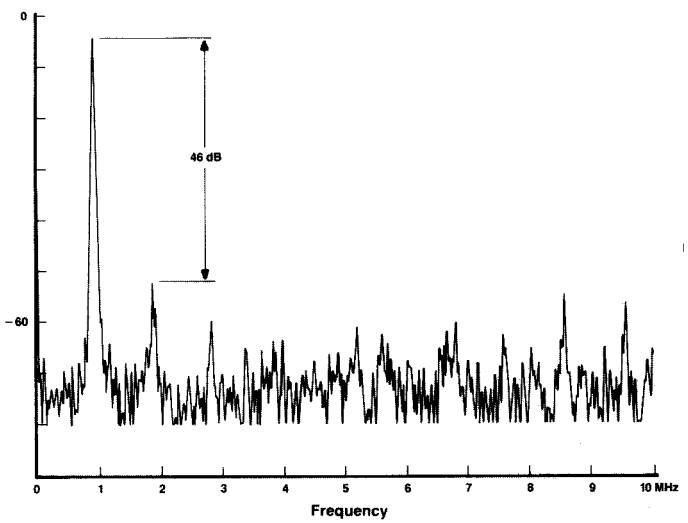

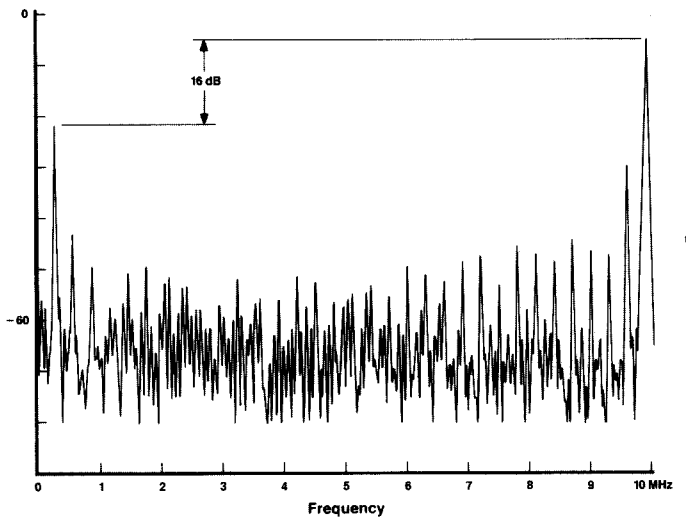

Figures from Reference 1

Histogram test

- Drive the input of the ADC with a full-scale sinusoid and plot the histogram

  Number of occurrences vs. output code

- Best method of measuring DNL

  Also yields missing codes, gain and offset errors

- Advantages:

  Less sensitive to noise in test signal

- Disadvantages:

  Large number of samples required (19.8 million for 15-bit ADC measuring to 95% confidence)

  Temporal and thermal variations of test equipment and DUT can cause errors (above example would take 5.5 hours at 1 kHz)

Histogram test examples

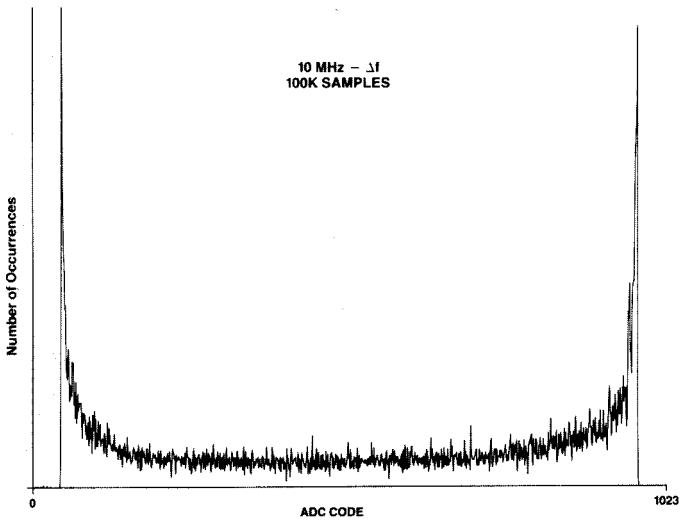

20 MHz, 10-bit ADC with small DNL

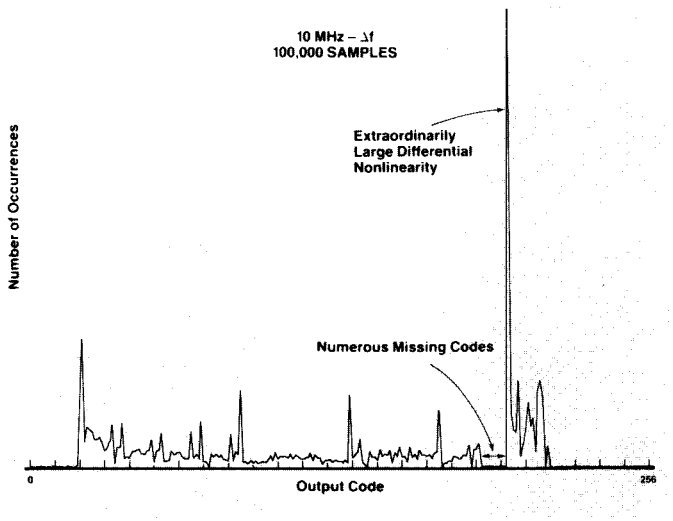

20 MHz, 8-bit ADC with large DNL
and missing codes

Figures from Reference 1

Sine Wave Curve Fit

- Digitize a spectrally pure 90% full-scale sinusoid and fit an ideal sinusoid to the data using least-squares minimization

  Compare the rms error between the actual and ideal signals with the rms error from an ideal quantizer of equal resolution

- Yields total rms error and effective number of bits (ENOB)

- Advantages:

  ENOB is a pseudo-standard for comparing devices

- Disadvantages:

  All error sources are rolled together -- devices with identical ENOB may respond differently, depending on the application

  Accurate test signal may be difficult to generate, especially for high-speed ADC's

Conventional dynamic test methods may not predict multiplexed device performance

- Multiplexed operation is unique in that the ADC must track signals well in excess of the Nyquist frequency

  Manufacturers often omit full-power bandwidth from specifications

- Conventional dynamic testing assumes that signals above the Nyquist frequency have been eliminated

- Multiplexed operation requires test methodology which evaluates input amplifier and sample-and-hold bandwidth, slew rate, and stability.

Simple multiplexing can stress ADC performance

- Multiplexing can result in a full-scale signal change in one sample period

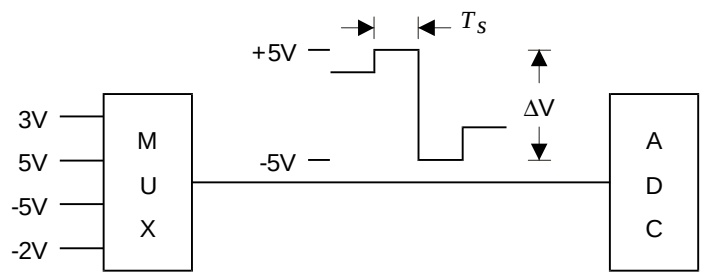

- Analysis shows that the ADC bandwidth and slew rate must increase significantly over the sinusoidal signal case

Resolution	Bandwidth	Slew Rate
8 bits	2.0 x f_n	4 x f_n sinusoid
12 bits	2.9 x f_n	5.7 x f_n sinusoid
16 bits	3.8 x f_n	7.5 x f_n sinusoid

- Fortunately, this mode of operation typically uses a low sample rate

The readout of a multiplexed diode array further stresses the ADC's dynamic performance

- Requirement to settle pixel value and kTC offset cuts available settling time by a factor of two
- Inclusion of a sample-and-hold simply shifts the problem

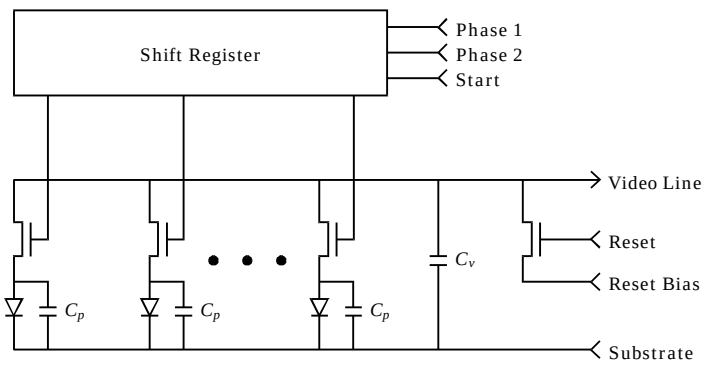

Schematic of a Reticon M-series linear array

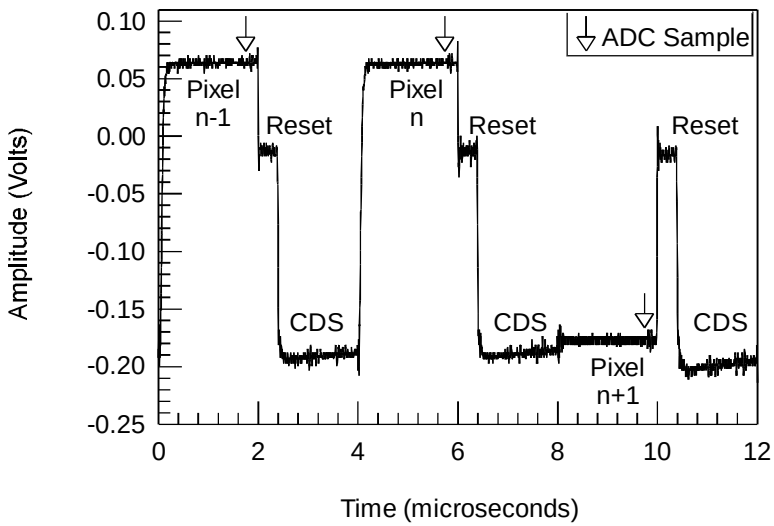

M-series array output measured at preamplifier

Analog post-processing may not help the problem

- Slew rates can increase due to signal amplification
- Bandwidth limiting may reduce overdrive on ADC input stage

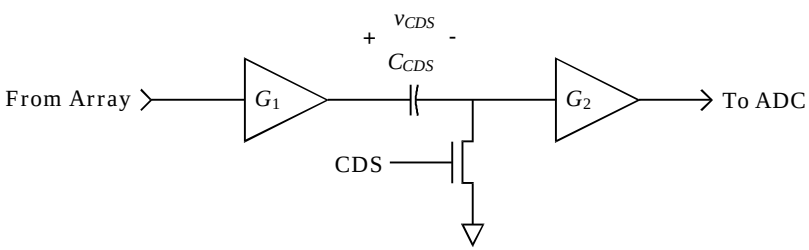

CDS signal conditioning circuit

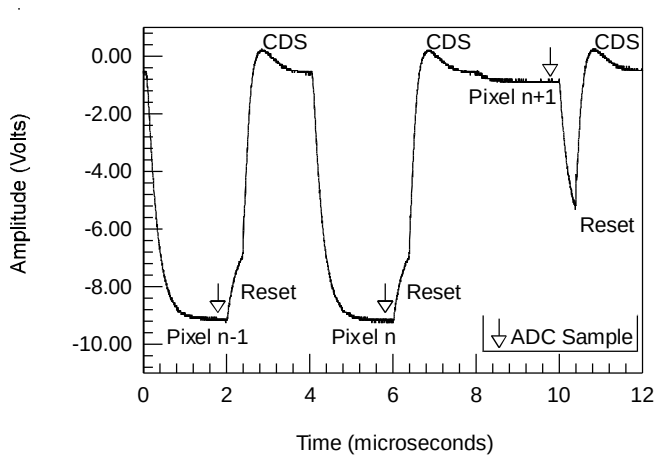

M-series array output measured at ADC input

Array readouts represent a "worst case" because speed and resolution requirements are typically high

- The following table shows a comparison of the bandwidth and slew rate requirements for the two multiplexing cases

ADC Resolution (N)	Simple Multiplexing		Photodiode Readout	
	Minimum Bandwidth	Minimum Slew Rate	Minimum Bandwidth	Minimum Slew Rate
8	1.99 f_N	12.5 $f_N \Delta V$	4.0 f_N	25.0 $f_N \Delta V$
10	2.43 f_N	15.3 $f_N \Delta V$	4.9 f_N	30.5 $f_N \Delta V$
12	2.87 f_N	18.0 $f_N \Delta V$	5.7 f_N	36.0 $f_N \Delta V$
16	3.75 f_N	23.6 $f_N \Delta V$	7.5 f_N	47.1 $f_N \Delta V$

- The maximum slew rate of a sinusoid at the Nyquist frequency is given by $\pi f_n \Delta V$

The effect of slew rate and bandwidth can be seen in ENOB plots

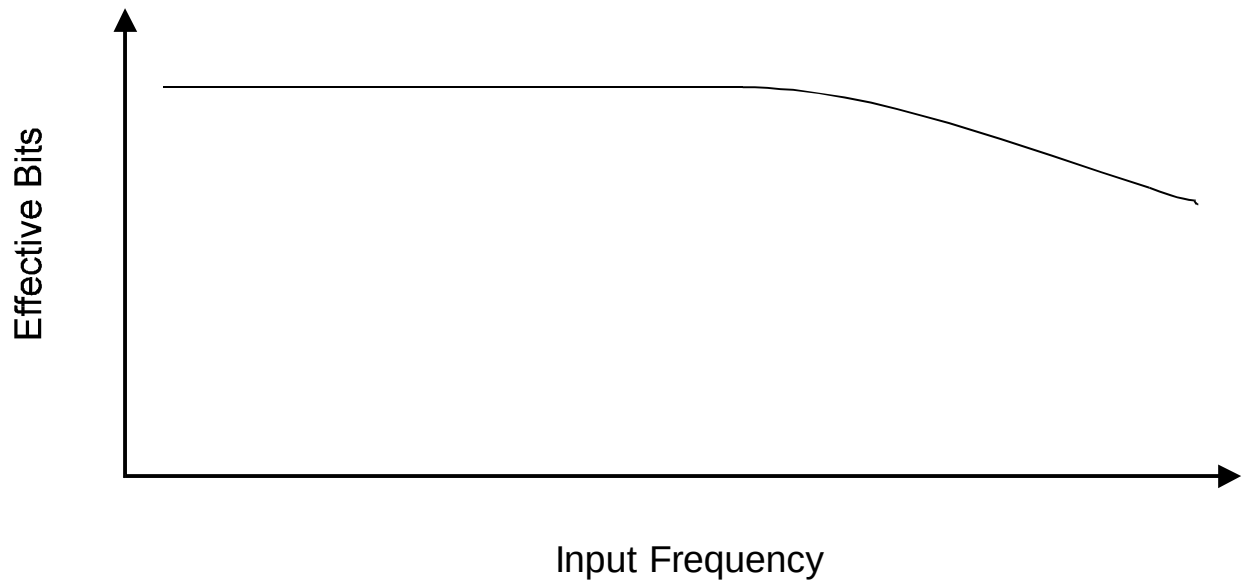

- ENOB decrease with increasing frequency is due to limited slew rate and gain errors resulting from insufficient bandwidth

How can an ADC be tested for use in a multiplexed mode?

- Conventional dynamic tests do not stress performance
- Envelope Test is representative of simple multiplexing case

  A near Nyquist frequency sinusoid is used to force sampling of alternating phases of the input signal

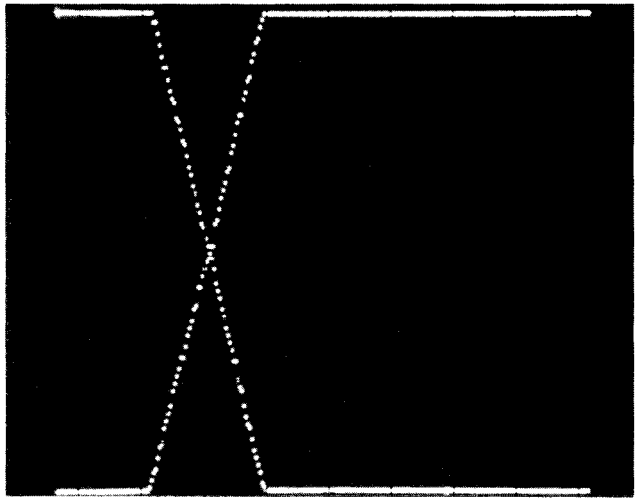

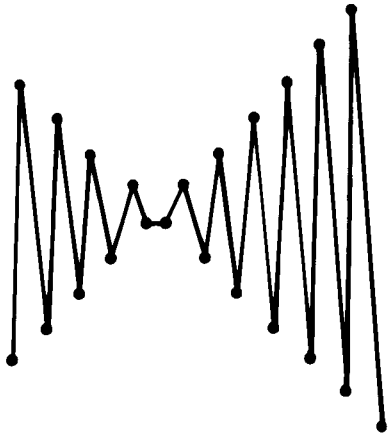

- "Contrast Test" is proposed for array readout applications

Figures from Reference 1

There are several global requirements for ADC's used in electronic imaging applications

- The ADC must not introduce discontinuities where none exist

  This is a measure of the DNL and is important in preserving the aesthetic quality of the image (pleasing to the eye)

- The ADC must preserve discontinuities (edges or contrast)

  This is less important for viewing by a person because the eye is an excellent edge detector

  This is very important for machine vision and imaging radiometry applications so that the scene contrast and the pixel radiance are accurately measured

The contrast test simulates the multiplexed array application (electronic imaging)

- A variable amplitude, variable phase square wave is used as the test signal
- Input and output data are compared to measure DNL and step response

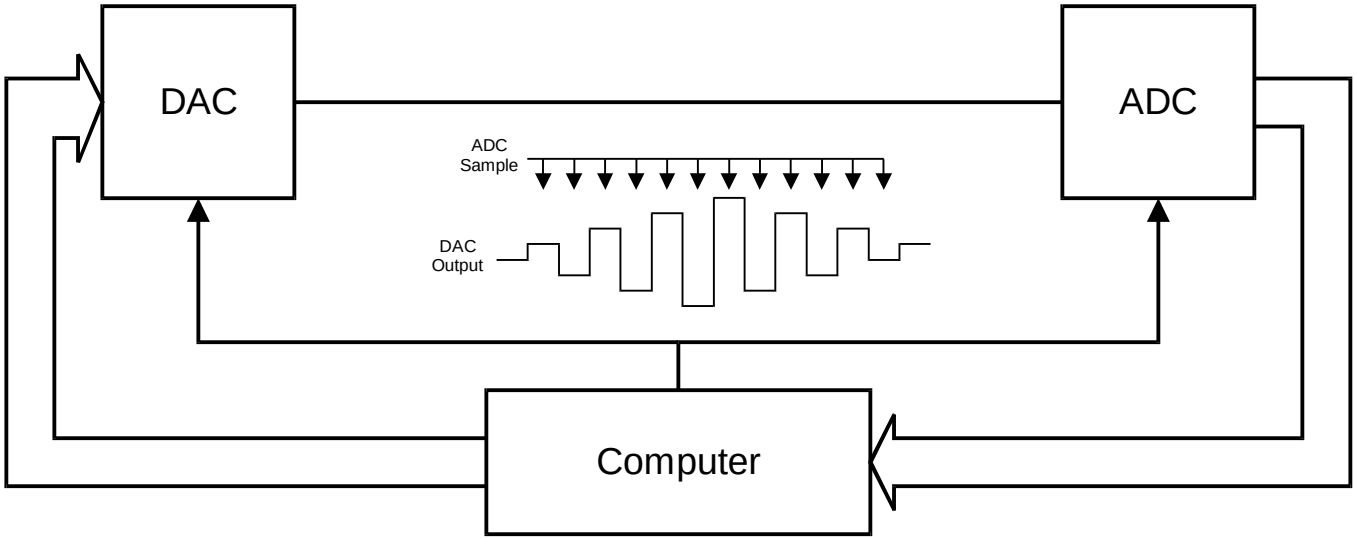

- DAC performance is critical and must exceed ADC performance

Summary

- ADC selection is critical in preserving data quality
- Static testing is of limited value
- Dynamic testing will predict performance in signal reconstruction mode
- New test methods are needed for testing ADC's used in multiplexed mode

Consider the application when selecting ADC test methods

References

1. Hewlett Packard Corporation, Dynamic Performance Testing of A to D Converters, Product Note 5180A-2.

2. D.W. Doerfler, Techniques for Testing a 15-Bit Data Acquisition System, SAND 85-7250, Sandia National Laboratories, 1985.

3. M. J. Demler, Time-domain techniques enhance testing of high-speed ADCs, *EDN*, March 30, 1992, p. 115-120.

4. T.E. Linnenbrink, Effective Bits: Is That All There Is?, *IEEE Trans. IM*, vol. 33, no. 3, p.184-187, Sept. 1984.

5. C. Sabolis, Seeing Is Believing, A/D converters make the difference in imaging applications, *Photonics Spectra*, pp. 119-126, October 1993.

6. N. Ahmed, Discrete-Time Signals and Systems, Reston Publishing Company, Reston Va.