“Real” components complicate modeling & design

- Tolerances
  - High precision or matched resistors are expensive
  - Hand “selects” are time consuming, therefore expensive and probably not “manufacturable”
  - Good designs account for (compensate?) component tolerances
- Temperature coefficients
  - +/- 100 ppm/°C or more for “stock”
  - Low TCR resistors are expensive
- Discrete values available (E24, E48, E96…)
  - You may not always be able to get the ratio you want
  - Parallel or series combinations acceptable under some circumstances
  - Potentiometers are imprecise, high TCR, and drift – use only when necessary
- **Spice DOES NOT model reality. It only models what you (or the developer of the model) tell it to.**

There is no such thing as “Ideal”

- All passives have parasitic R’s , L’s and /or C’s
  - Component leads are inductive
  - There is capacitance from the body to ground and between the leads
  - There is capacitance between the turns of an inductor
  - There is resistance in the inductor winding
- Resistors have noise $v_n = (4kTR\Delta f)^{1/2}$
- Capacitors have memory (soakage), leakage, and dissipation that are a function of the dielectric properties and construction

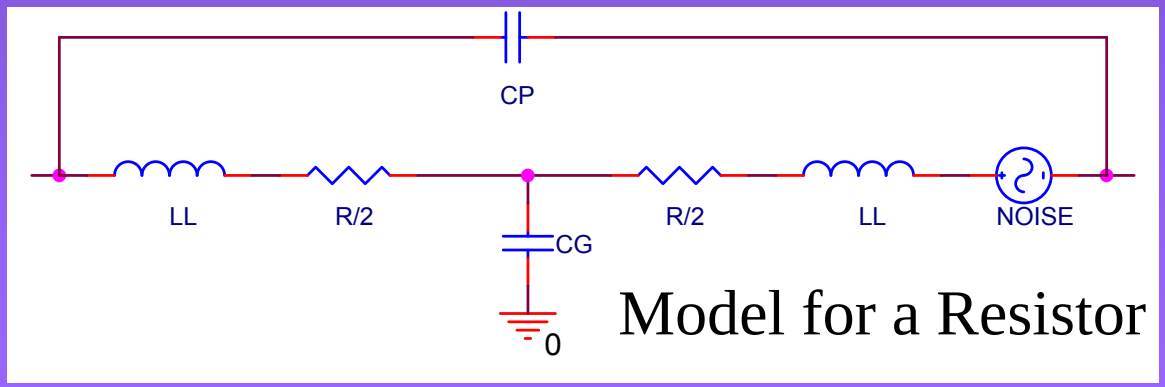

Difference amplifier common mode rejection
(perfect resistor matching)

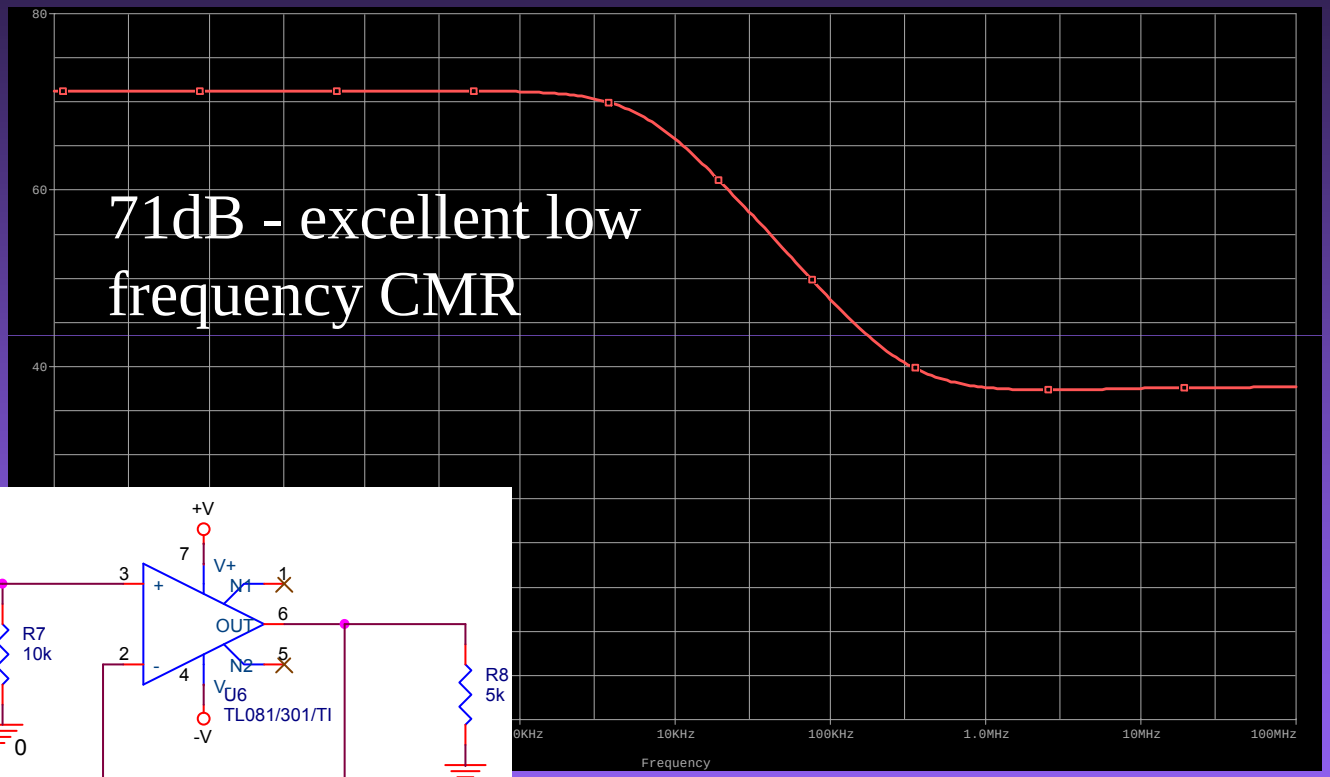

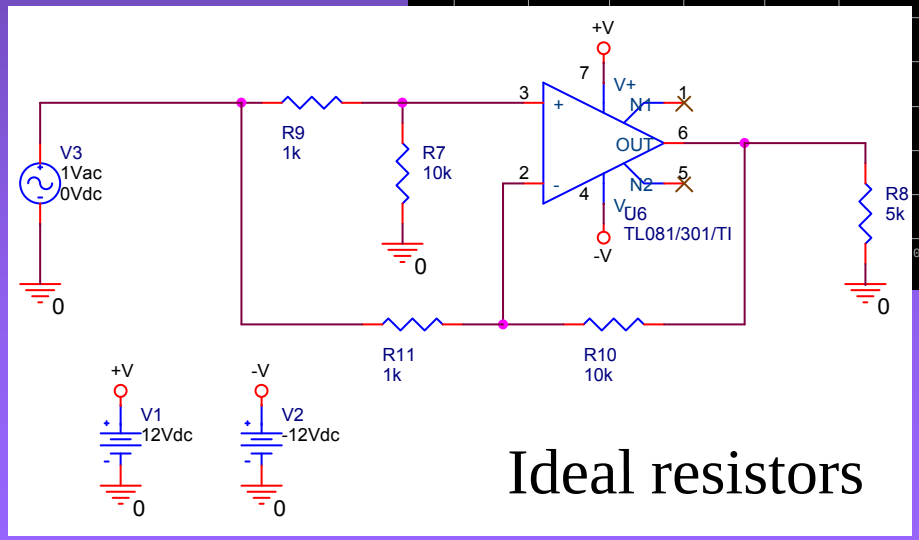

Difference amplifier common mode rejection
(1% resistor tolerances, Monte Carlo analysis)

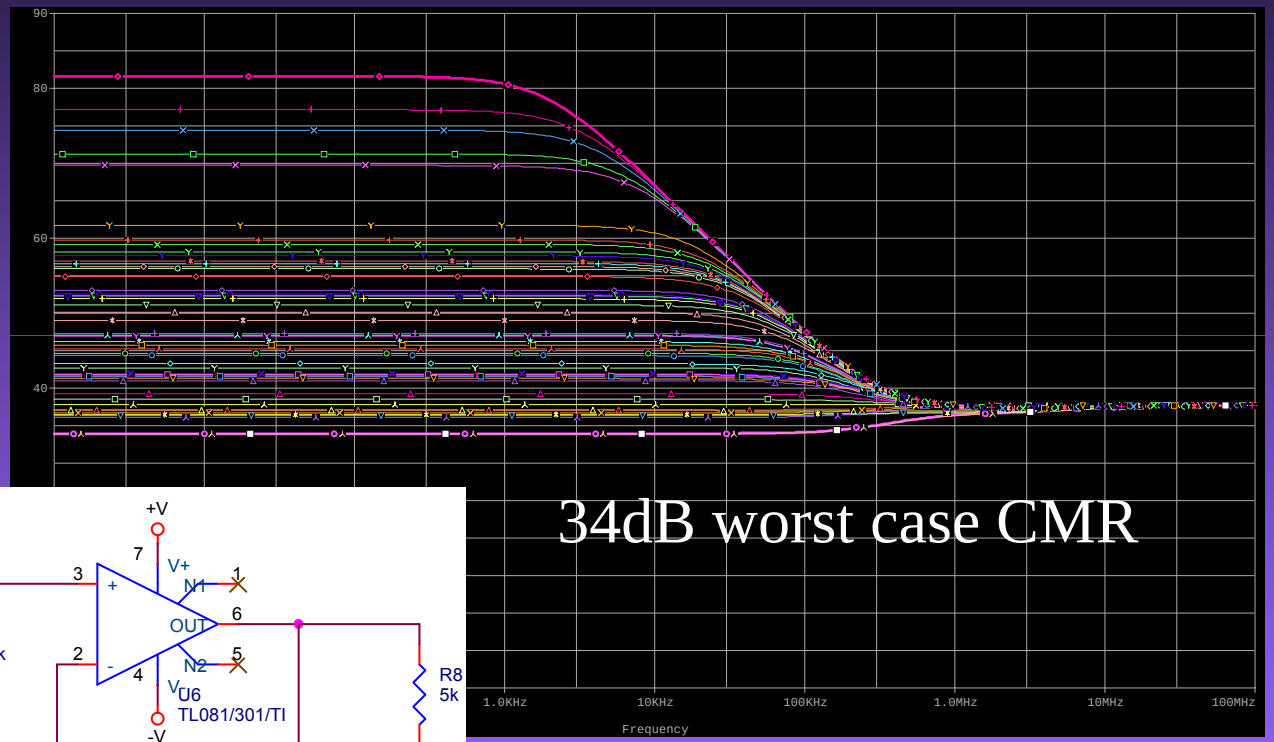

34dB worst case CMR

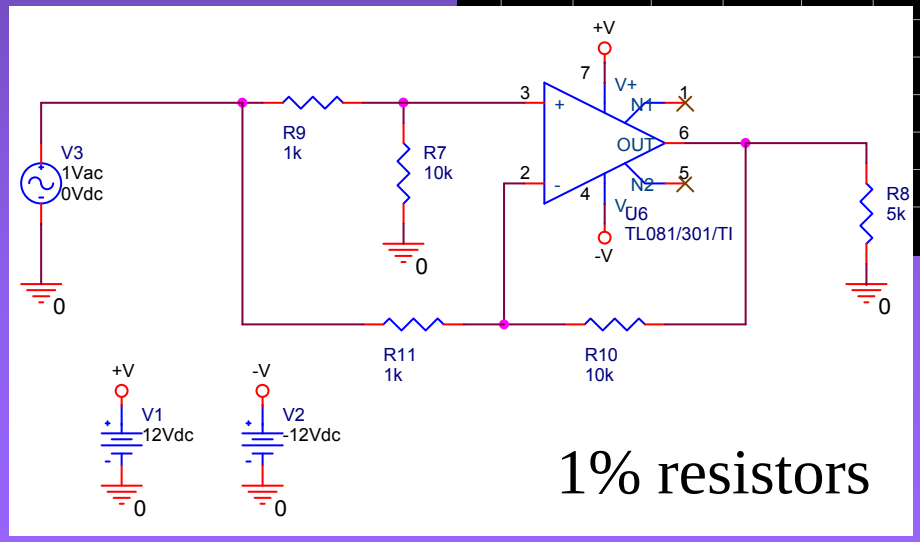

1% resistors

This does not account for Variations due to temperature

Difference amplifier common mode rejection
(10°C temperature change, 100ppm/°C resistors)

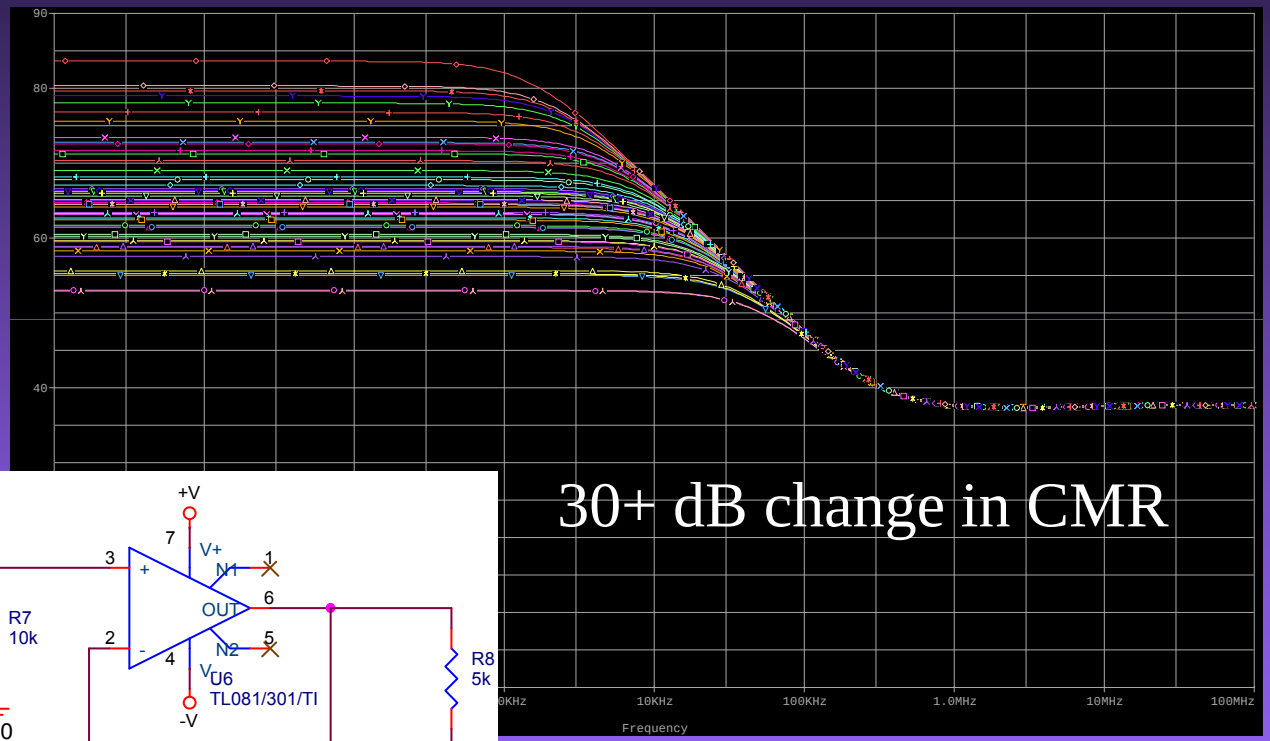

30+ dB change in CMR

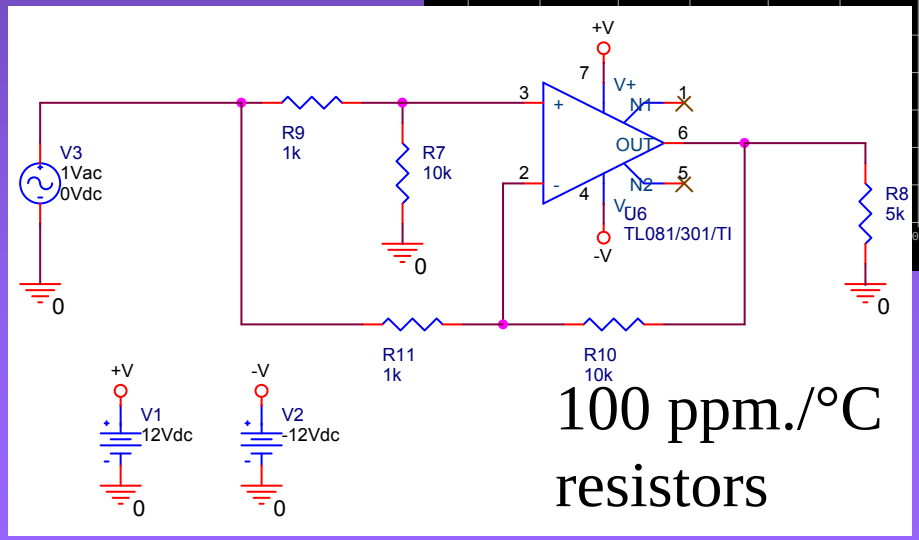

100 ppm./°C resistors

A 16-bit ADC requires
a signal with >96dB SNR
or you are just digitizing noise