Comparators – a brief overview

- Similar to an Op Amp…including the symbol
  - $A_V = \infty$
  - $I_{BIAS} = 0$
  - $V_{OS} = 0$
  - $BW = \infty$
- Except…
  - Output stage is likely different (open collector/drain, open emitter/source)
  - Designed to saturate and recover rapidly
  - Not compensated, i.e. no provision for unity gain stability
  - Not intended to be used as an amplifier
  - Used open loop or with POSITIVE feedback
  - More…other difference can be subtle

Comparators – function and application

- Decides if an input voltage is above or below a reference voltage
  - i.e. Single-bit analog-to-digital converter
  - Zero-crossing detector
  - Oscillators
  - Drivers (switch, relay, LED, etc.)
- Often have unique output structures for speed or interfacing
  - Compatibility with standard logic levels
  - Latching outputs
  - Open-collector/drain, open-emitter/source
- Suffer from offset and bias current problems just like Op Amps
- Input Overdrive – magnitude of ΔV_{IN}
  - Affects output response time

Op Amps as Comparators

- This is often done with the extra amp in a dual or quad package
- Op Amp input protection diodes often prevent using an Op Amp as a Comparator
  - Large input differential causes large currents and damage

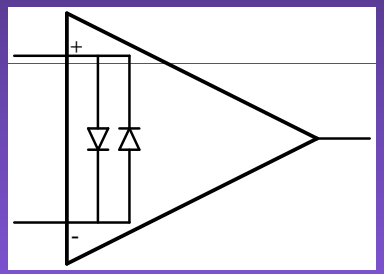

- Op Amps have better accuracy and lower drift (DC and dynamic)
  - Op Amp is really the only option for microvolt comparisons
- True Comparators are usually faster (no internal compensation)
- Output voltage may not be compatible with logic levels
- Very poor saturation recovery
- Comparator as an Op Amp – don't even try

Comparators make simple “digital” decisions

- Simple view of LM311 Comparator operation:

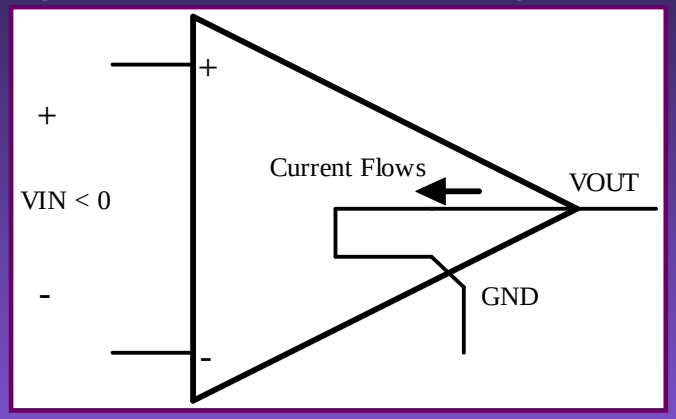

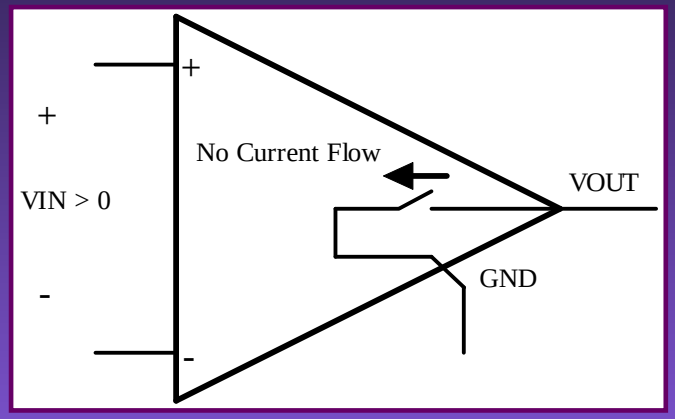

  - Output acts as Transistor “switch” – only allows current to flow one direction
  - External connections (i.e. pull-up, pull-down) define output operation
- “Open” Emitter not available on most comparators
- High-speed comparators have a defined output circuit to preserve speed
- “Open” Collector allows flexibility in interfacing
  - Voltage level shifting
  - LED or Relay drivers
- If V_{IN} = 0 V, output is INDETERMINATE!

LM311 – Output configurations are limitless

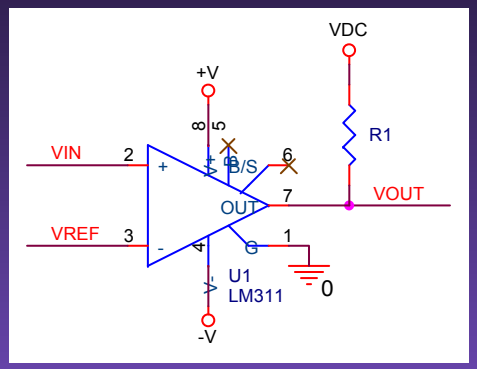

- $V_{IN} < V_{REF}$, $V_{OUT} = 0$; $V_{IN} > V_{REF}$, $V_{OUT} = V_{DC}$

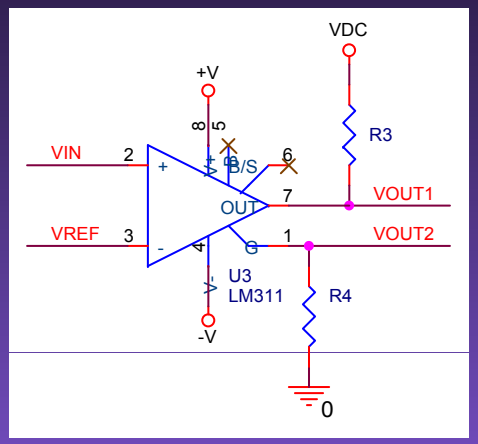

- $V_{IN} < V_{REF}$, $V_{OUT1} = V_{OUT2} = V_{DC}R_4/(R_3 + R_4)$; $V_{IN} > V_{REF}$, $V_{OUT1} = V_{DC}$, $V_{OUT2} = 0$

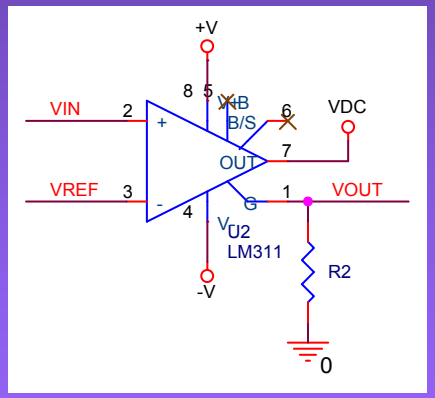

- $V_{IN} < V_{REF}$, $V_{OUT} = V_{DC}$; $V_{IN} > V_{REF}$, $V_{OUT} = 0$

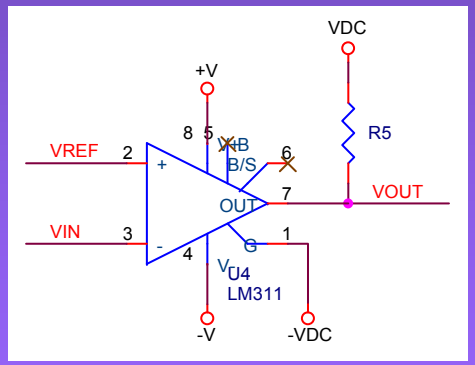

- $V_{IN} < V_{REF}$, $V_{OUT} = V_{DC}$; $V_{IN} > V_{REF}$, $V_{OUT} = -V_{DC}$

Problems with Comparators (LM311 specifically)

- Input Offset Voltage
- Input Bias Current
- Common-mode input range
  - Exceeding the CM input range or absolute input range can cause very strange responses (Definition, Survival, Operation)

$$V_{CM} = \frac{V_{IN}^{+} - V_{IN}^{-}}{2}$$

$$V_{IN}^{+} < V_{SS} + 30V \qquad V_{IN}^{+} < V_{DD} - 1.25V$$

$$V_{IN}^{-} > V_{DD} - 30V > V_{SS} \qquad V_{IN}^{-} > V_{SS} + 0.4V$$

- With passive pull-up, output rise asymmetrical
  - $t(V_{OL} \rightarrow V_{OH}) \neq t(V_{OH} \rightarrow V_{OL})$
- Noise – causes jitter is switching
- Overdrive – small overdrive = long switching time